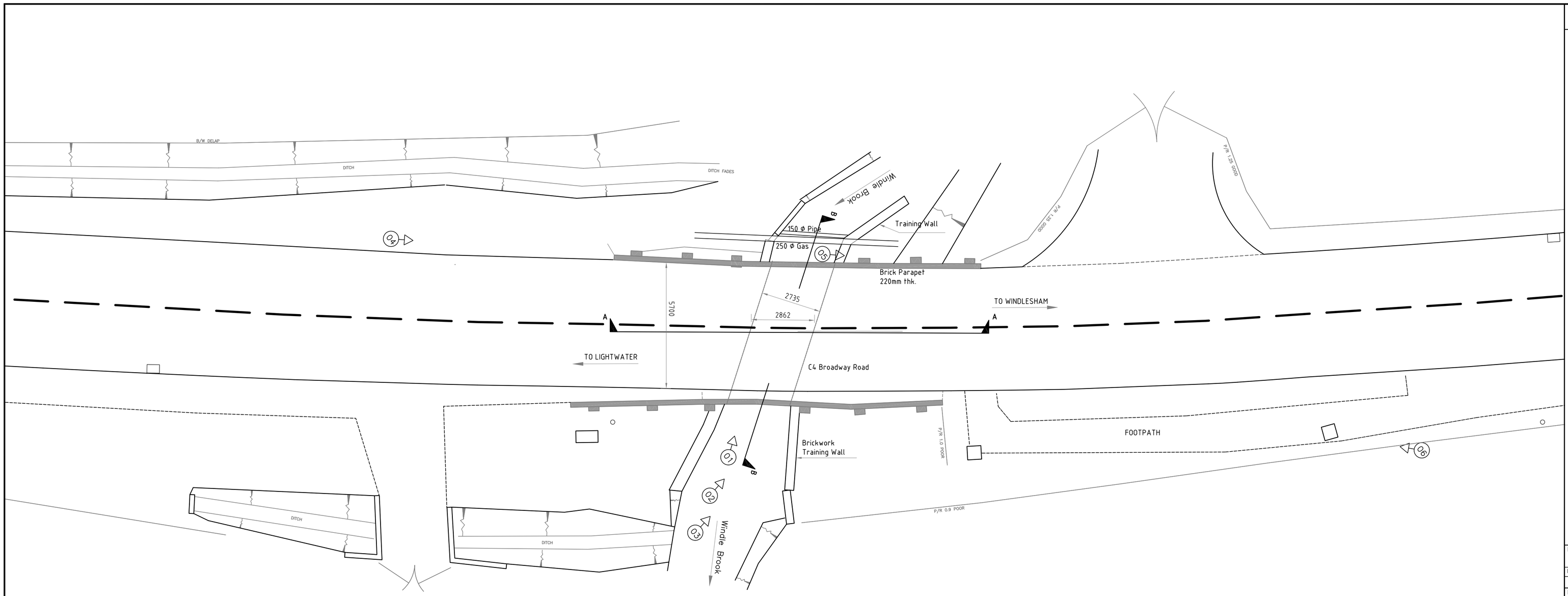

PLAN
Scale 1:100

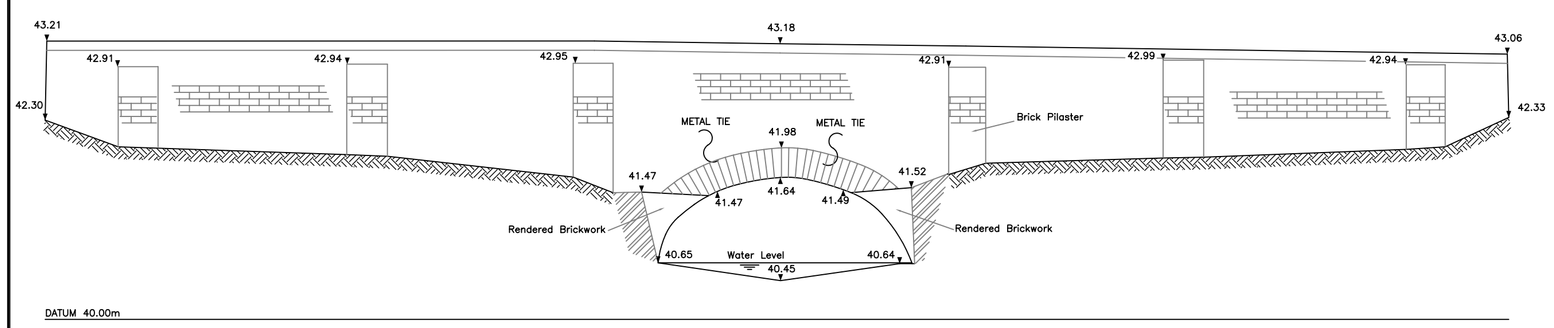

EAST ELEVATION
Scale 1:50

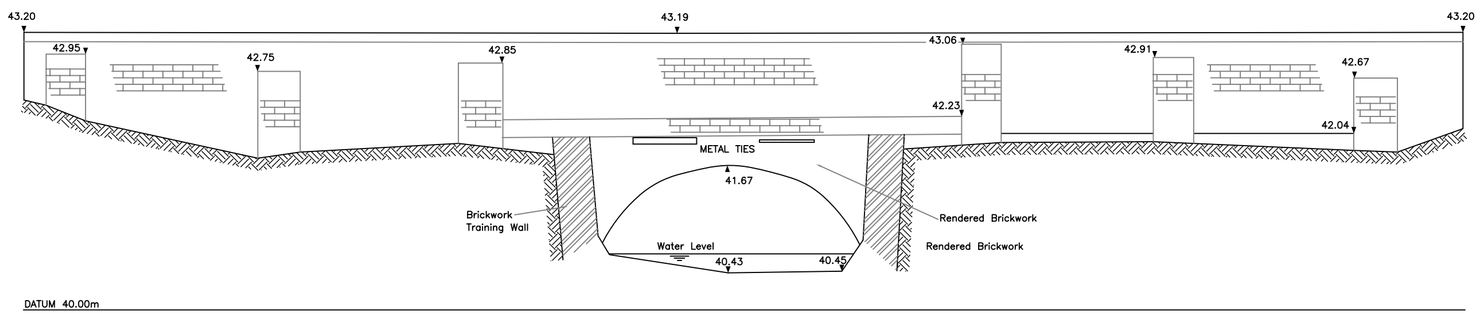

WEST ELEVATION
Scale 1:50

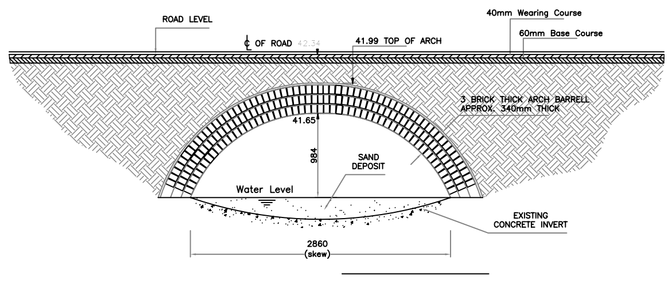

CROSS–SECTION A–A
Scale 1:50

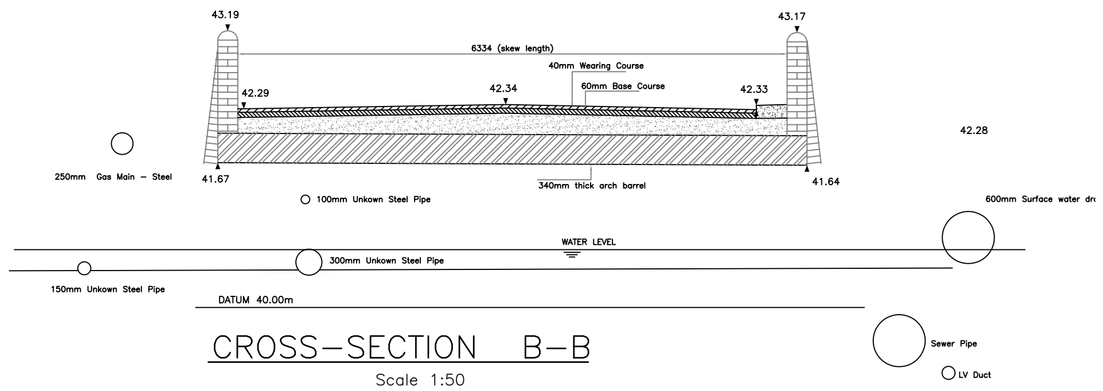

CROSS–SECTION B–B
Scale 1:50

VIEW 01

VIEW 02

VIEW 03

VIEW 04

VIEW 05

VIEW 06

0 50 100 150 200

22 Feb.06 – 4:39pm

Notes

1. This drawing shall be read in conjunction with all drawings listed on drg no. 3246/101

Rev						
Drawn + Sig.	Date	Check + Sig.	Date	Appro + Sig.	Date	
Rev						
Drawn + Sig.	Date	Check + Sig.	Date	Appro + Sig.	Date	
Rev						
Drawn + Sig.	Date	Check + Sig.	Date	Appro + Sig.	Date	
Rev						
Drawn + Sig.	Date	Check + Sig.	Date	Appro + Sig.	Date	
Rev A	GENERAL REVISION					
WG		SO		SC		

Amendments

File Name
S:\project\3246\all\Drawings\structures\3246102.dwg

Project
BRIDGE STRENGTHENING
C4/510 BROADWAY ROAD
LIGHTWATER

Drawing
GENERAL ARRANGEMENT
OF EXISTING STRUCTURE

'Based upon the Ordnance Survey mapping with the permission of the Controller of Her Majesty's Stationery Office © Crown copyright. Unauthorised reproduction infringes Crown copyright and may lead to prosecution or civil proceedings.'
Surrey County Council LA 076872 1996.

North point

Scale
AS SHOWN

Drawn	WG	Sig.	WG	Date	01/05
Checked by originator	SO	Sig.	SO	Date	01/05
Approved	SC	Sig.	SC	Date	01/05

SURREY
COUNTY COUNCIL
Sustainable Development
Head of Transportation:
C.M.Findlay,
B.Sc., M.Sc., C.Eng., F.I.C.E

Project No. 3246
Contract Sheet No.
Drawing No. 3246/102
Rev. A
Classification
PRESENTATION

A1